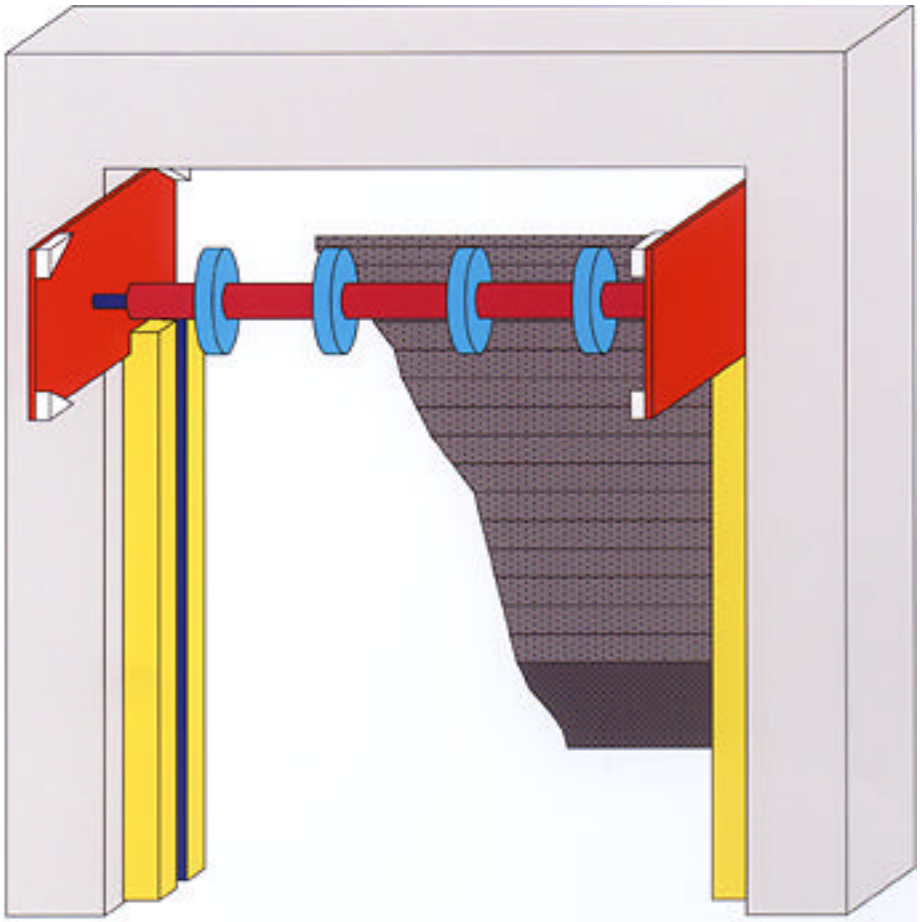

Inside Mount
Under Lintel
(Shown Without Hood or Fascia)